Monoblock Horizontal Centrifugal Pumps

EN733(DIN24255) standard

Advanced high efficiency energy saving design
Long life robust construction
Low noise quiet running
Ensured performance
Multi-material for different application

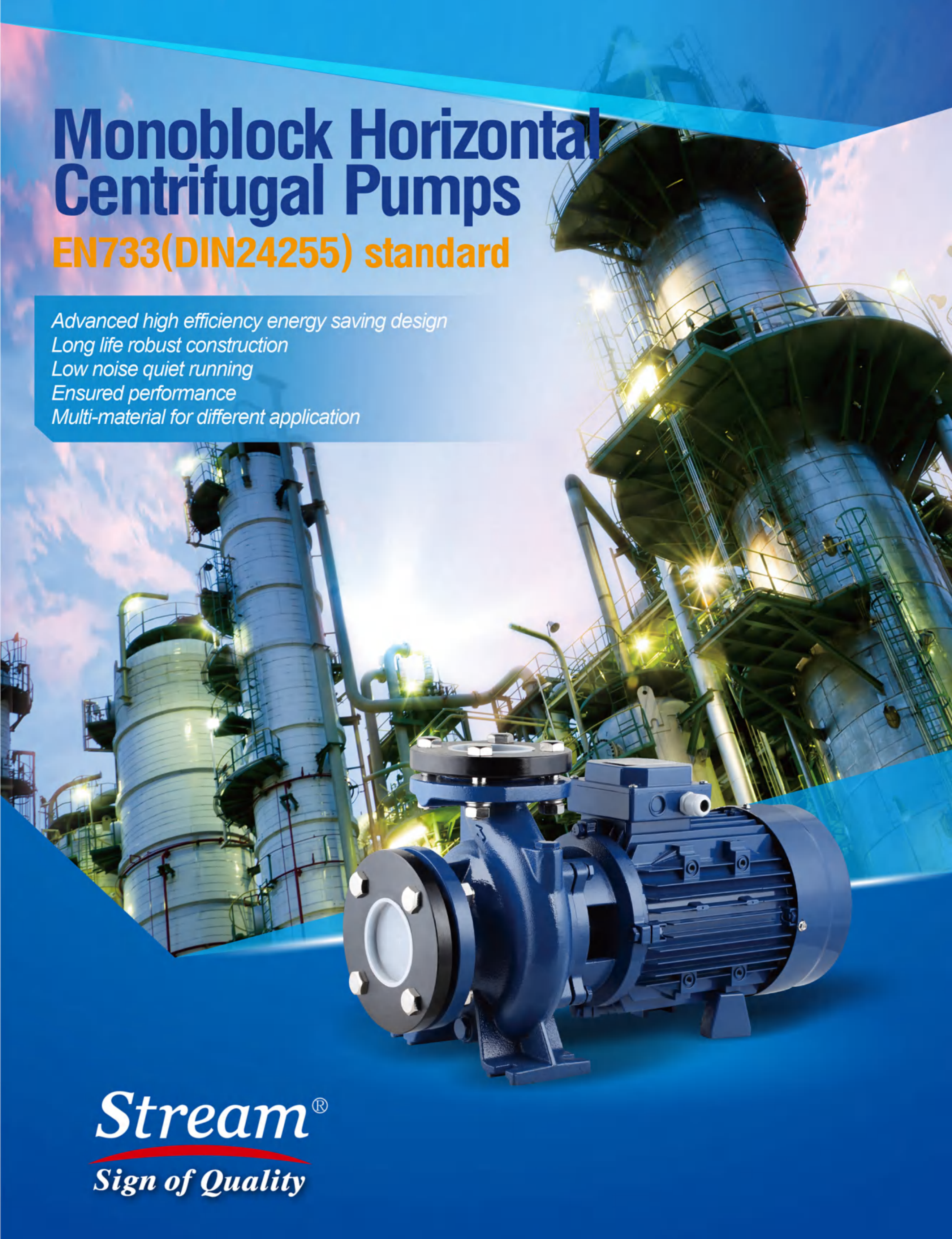

Stream®
Sign of Quality

www.streampumps.com

Application

Cooling water
Irrigation
Fire-fighting systems
Water supply
Water distribution

Pump Specifications

Discharge flange diameter: DN32 – DN80 mm
Capacity Q range: 4.5m3/h - 240m3/h (50HZ)
Head H range: 10m – 92.5m
Operating speed: 2900RPM (50Hz)

Construction Features

Main dimensions: Apply to EN733 (DIN24255) standard and back pull out type
Casing structure: End suction, center radial discharge
Flange pressure rate: ISO7005.2 PN1.6MPa
Shaft seal: Single mechanical seal (Graphite / Silicon carbide / Ceramic / NBR / FPM / SS304 / SS316) According to Standard EN 12756
Driven shaft: Pump and motor flanged together to form a close-coupled unit, with common shaft.

On request:

Other operating voltages and frequencies
Special mechanical seal; special liquids
Special temperature

Operation Conditions

Working Temperature Range: -10℃ ~ +90℃
Max. Allowable Working Pressure (MAWP): 10bar
Hydrostatic Test Pressure = 1.3 times the maximum discharge pressure, but not exceed 13 bar)

Motor Specifications

Totally Enclosed Fan Cooled asynchronous induction motor

Winding:

3 Phase	2 – 4HP 5.5 – 50HP	220-240VD / 380-420VY - 50HZ 380-420VD / 660-725VY - 50HZ
1 Phase	2 – 5.5HP	

Degree of motor protection: IP55 (IEC60034-5)
Insulation Class: F
Duty: S1 continuous duty operation
Altitude shall not exceed 1000m above seal-level (IEC60034-1)
Allowed air temperature between -20℃ and 40℃ (IEC60034-1)

On request:

Motor winding is protected with 3 PTC thermistors for tripping

SEN 50-200B

SEN
Stream EN733 standard pump
50
Pump discharge flange: DN50mm
200
Nominal impeller diameter
B
The trimmed times of impeller

Materials Specifications for Pump Main Parts:

Part Description	Materials Class	USA AISI, ASTM	Germany DIN	Japan JIS
Casing	Cast iron	Class 25B	GG-20	FC200
	Austenitic Stainless steel	CF-8, SS30 CF-8M, SS316	DIN 1.4308 DIN 1.4408	SUS304 SUS316
Impeller	Cast iron	Class 25B	GG-20	FC200
	Austenitic Stainless steel	CF-8, SS304 CF-8M, SS316	DIN 1.4308 DIN 1.4408	SUS304 SUS316
	Bronze	C83600	G-CuSn5ZnPb	BC6
Shaft	Carbon steel	1045	C45	C45
	Martensite Stainless steel	AISI420	DIN1.4021	DIN1.4021
	Austenitic Stainless steel	AISI304	DIN1.4301	DIN1.4301
Motor bracket	Cast iron	Class 25B	GG-20	FC200

Explosion

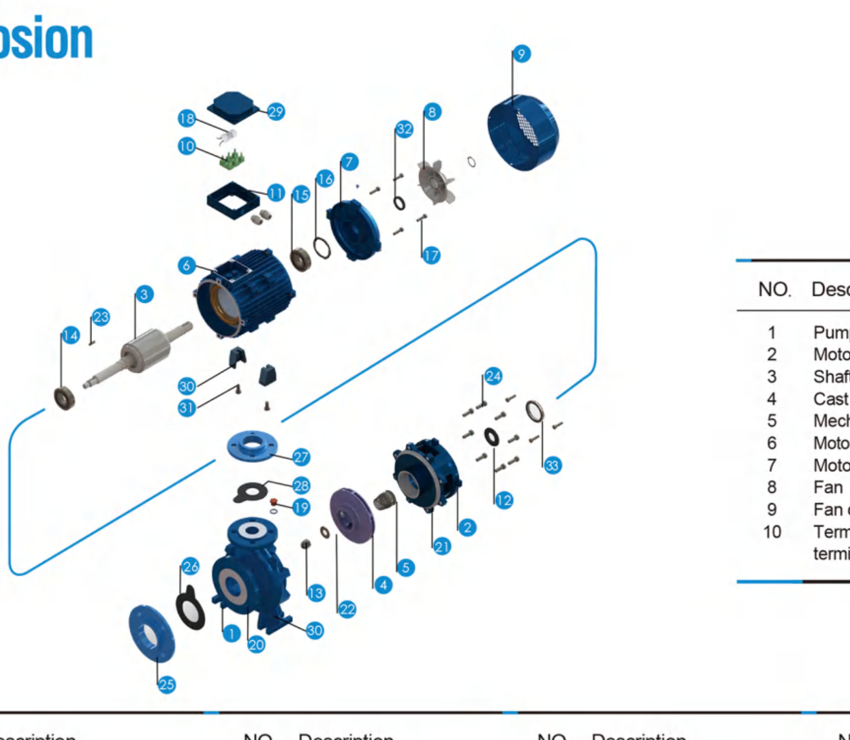

NO.	Description
1	Pump body
2	Motor bracket
3	Shaft and rotor 3 phase
4	Cast iron impeller / Bronz impeller
5	Mechanical sea
6	Motor case and winding 3 phase
7	Motor cover
8	Fan
9	Fan cover
10	Terminal box 3 phase / terminal box 1 phase

NO.	Description	NO.	Description	NO.	Description	NO.	Description
11	Terminal box cover	17	Motor rod	23	Key	29	capacitor holding box
12	Splash guard	18	capacitor	24	Motor bracket-pump body screw	30	Metal foot
13	Impeller stop nut	19	Filling plug	25	Suction pipe flange	31	Lockinpin (screw)
14	Pump side ball bearing	20	Drain plug	26	Suction pipe gasket	32	V-Ring
15	Fan side ball bearing	21	Pump body O-R gasket	27	Delivery pipe flange	33	Ring seal
16	Adjusting ring	22	Mechanical seal spacer	28	Delivery pipe gasket		

Installation Dimension Drawing

Dimensions (mm)			Holes	
DN	D	K	n°	Ø
32	140	100	4	18
40	150	110	4	18
50	165	125	4	18
65	185	145	4	18
80	200	160	4	18
100	220	180	8	18

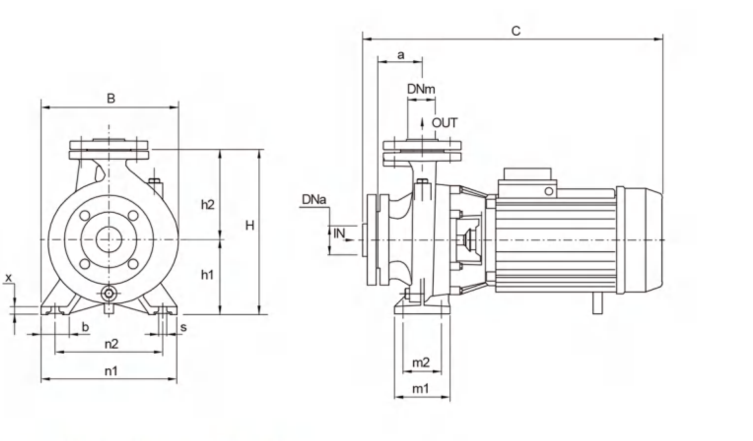

Construction Features

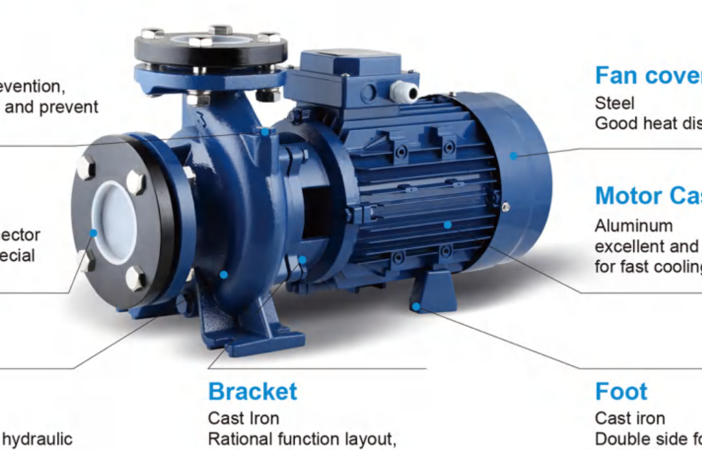

Drain Plug
Brass
Anti-corrosion, rust-prevention, rigidity material to seal and prevent leakage

Inlet
Cast iron
ISO7005.2 PN16 connector for common model, special request is acceptable

Pump body
Cast Iron
Professional design in hydraulic passageway brings higher efficiency and stability

Bracket
Cast Iron
Rational function layout, excellent physical design

Fan cover
Steel
Good heat dissipation

Motor Casing
Aluminum
excellent and rigidity material for fast cooling, more solid

Foot
Cast Iron
Double side foot, more stable

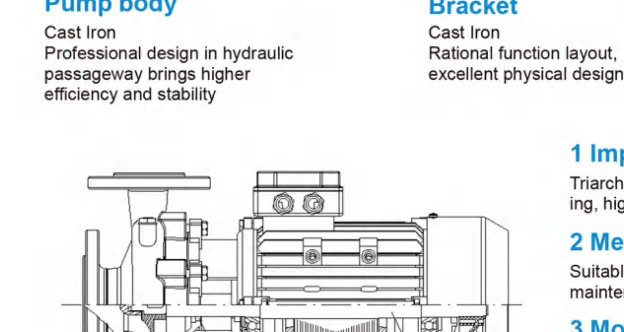

1 Impeller
Triarchic theory and excellent fluid design feature in power-saving, high efficiency,low pulse and noise

2 Mechanical Seal
Suitable for frequent start without external cooling and maintenance, various materials for different working conditions

3 Motor
High-efficiency, power-saving and low noise, with protection level F and hermetically-sealed construction to prevent spatter, water and dust

4 Shaft
AISI1045(On request:AISI420/AISI304)

Selection

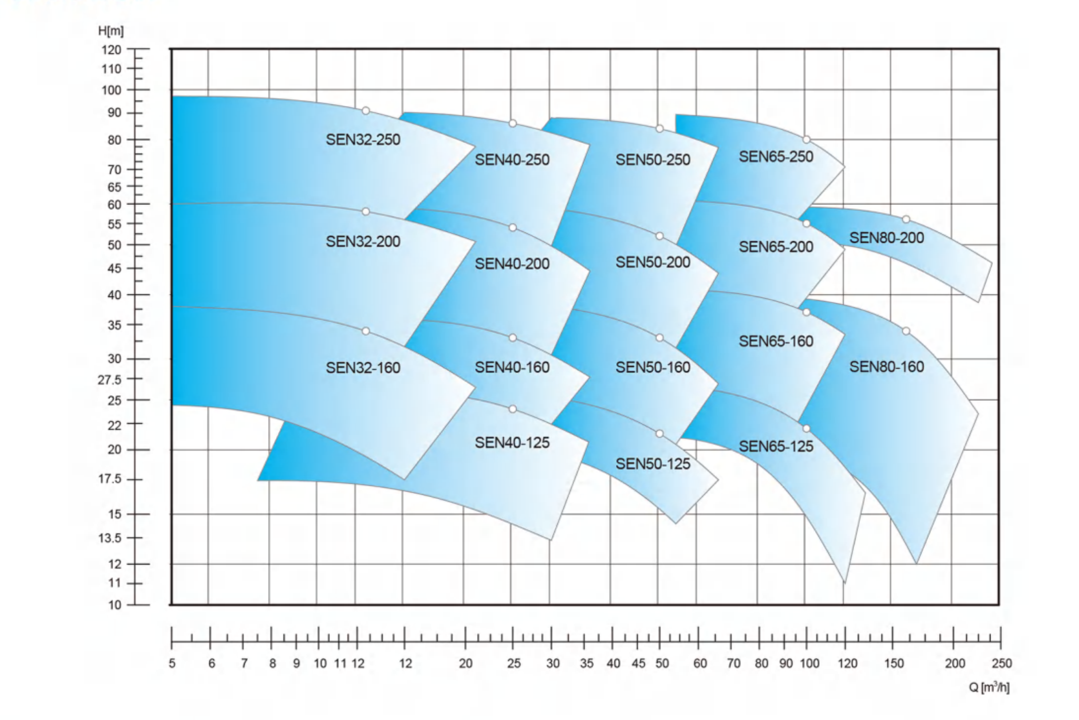

Technical Parameter List

Type	P2 nom.		P1 max	I	Q (m³/h - l/min)															
					0	4.5	6	7.5	9	12	15	18	21	24	27	30	33	36	156	168
					0	75	100	125	150	200	250	300	350	400	450	500	550	600	2600	2800
	HP	KW	KW	3x400V 50 HZ	H (m)															
SEN32-160C	2	1.5	2.3	4	24.7	24.4	24.1	23.6	23	21.5	19.6	17.2	14.1						~ 2900 r.p.m.	
SEN32-160B	3	2.2	2.9	5.2	29		28.5	28	27.3	25.7	23.8	21.4	18.5	14.8						
SEN32-160A	4	3	4.1	7.1	36.8		36.4	36	35.4	34.2	32.8	31.1	28.8	26	22.3					
SEN32-200C	5.5	4.0	4.9	8.8	40.1		39.7	39.6	39.3	38.3	36.9	35.2	33.0	30.4	27.6					
SEN32-200B1	7.5	5.5	6.3	11.1	46.4		46.5	46.4	46.2	45.4	44.2	42.5	40.5	38.3	35.7	32.5				
SEN32-200B	7.5	5.5	7.0	12.4	50.1		50.2	50.1	49.9	49.3	48.0	46.4	44.5	42.4	39.8	37.2				
SEN32-200A1	10	7.5	7.5	13.1	55.1		55.1	55.0	54.9	54.2	52.9	51.2	49.2	46,8	44.3	41.6				
SEN32-200A	10	7.5	8.5	15.0	58.6		59.0	58.9	58.8	58.2	57.1	55.5	53.4	51.1	48.4	45.6	42.5			
SEN32-250C	12.5	9.2	11.9	20.1	70			68.5	68.0	67.0	65.5	63.5	61	58	50	36.5				
SEN32-250B	15	11	14.4	24.2	82			81.0	80.5	79.5	78.5	77.0	74.5	71.9	65	52.5				
SEN32-250A1	20	15	16	27.4	91.0			90.0	89.9	89.0	88.0	86.0	83.5	80,8	74	61.5				
SEN32-250A	20	15	18.1	30.1	93.0			92.5	92.0	91.5	90.5	89.5	87.5	85	78.5	66				

Type	P2 nom.		P1 max	I	Q (m³/h - l/min)															
					0	4.5	6	7.5	9	12	15	18	21	24	27	30	33	36	39	42
					0	75	100	125	150	200	250	300	350	400	450	500	550	600	650	700
	HP	KW	KW	3x400V 50 HZ	H (m)															
SEN40-125C	2	1.5	2.3	4	17.4			17.6	17.5	17.3	16.9	16.4	15.8	15.1	14.2	13.3				
SEN40-125B	3	2.2	2.9	5.2	20.7				21.3	21.2	21.0	20.6	20.1	19.4	18.7	17.9	17.0			
SEN40-125A	4	3	4.1	7.1	25.2				25.8	25.8	25.6	25.4	24.9	24.4	23.7	22.9	22.0	21.1		
SEN40-160B	4	3.0	4.4	7.4	30.0				30.1	30.0	29.6	29.0	28.2	27.1	25.9	24.4	22.8	21.0		
SEN40-160A	5.5	4.0	5.7	9.9	35.4				35.6	35.5	35.3	35.0	34.2	33.2	32.0	30.6	29.0	27.3	25.4	
SEN40-200B1	7.5	5.5	6.5	11.1	42.2				42.4	42.3	42.1	41.3	40.3	39.1	37.5	35.5	33.3	30.7	28.0	
SEN40-200B	7.5	5.5	7.4	12.7	44.7				44.9	44.8	44.6	44.0	42.9	41.6	40.0	38.1	36.1	33.6	30.8	27.9
SEN40-200A1	10	7.5	8.1	13.8	49.7				49.7	49.7	49.4	48.7	47.9	46.6	45.0	43.2	41.1	38.6	35.9	
SEN40-200A	10	7.5	9.8	16.5	57.7				57.7	57.5	57.1	56.3	55.4	54.1	52.5	50.5	48.5	45.9	43.3	40.3
SEN40-250C	12.5	9.2	12.6	21	65.0				64.3	63.9	63.3	62.6	61.5	60.2	58.8	56.9	54.5	51.6	48.5	45.5
SEN40-250B	15	11.0	14.4	24.2	75.5				74.6	74.2	73.5	72.7	71.7	70.4	69.0	67.2	65.0	62.5	59.5	56.0
SEN40-250A1	20	15	17.5	29.5	85				84.0	83.7	82.9	82.1	80.8	79.5	77.8	75.9	73.8	71.3	68.4	65.8
SEN40-250A	20	15.0	19.0	32.0	91.5				90.4	89.9	89.3	88.5	87.5	86.6	85.5	84.0	82.5	80.5	78.5	76.0

Type	P2 nom.		P1 max	I	Q (m³/h - l/min)																	
					0	12	15	18	21	24	27	30	33	36	39	42	48	54	60	66	72	78
					0	200	250	300	350	400	450	500	550	600	650	700	800	900	1000	1100	1200	1300
	HP	KW	KW	3x400V 50 HZ	H (m)																	
SEN50-125B	4	3	4.2	7.1	19.8	20.2	20.2	20.1	20.0	19.8	19.5	19.3	18.8	18.5	18.0	17.6	16.5	15.3	14.0	12.5	10.8	
SEN50-125A	5.5	4	5.5	9.6	24.8	25.2	25.2	25.1	25.0	24.8	24.6	24.3	23.9	23.5	23.2	22.7	21.8	20.7	19.4	17.9	16.2	
SEN50-160B1	7.5	5.5	6.2	10.7	29.3				30.3	30.2	30.0	29.6	29.0	28.4	27.7	26.9	25.2	23.2	21.0	18.7	16.1	13.2
SEN50-160B	7.5	5.5	6.7	11.6	31.1				32.1	32.0	31.7	31.4	31.0	30.4	29.7	28.9	27.3	25.3	23.1	20.7	18.0	15.2
SEN50-160A1	10	7.5	8.3	14.1	34.3				35.4	35.3	35.0	34.7	34.3	33.8	33.2	32.4	30.7	28.7	26.5	24.3	21.8	19.0
SEN50-160A	10	7.5	9.4	15.8	36.7				37.9	37.8	37.7	37.4	37.1	36.6	36.1	35.4	33.9	32.1	30.0	27.8	25.3	22.6
SEN50-200C	12.5	9.2	10.8	18.5	46.0					45.6	45.1	44.5	43.7	42.9	41.8	40.8	38.5	35.9	33.0	29.0	24.5	
SEN50-200B	15	11	12.4	21	50.8					51.0	50.5	50.0	49.3	48.5	47.7	46.8	44.7	42.2	39.5	35.9	32.0	
SEN50-200A1	20	15	14.5	25.4	57.0					57.3	57.1	56.7	56.2	55.6	54.8	54.1	52.2	50.2	47.5	44.0	40.0	
SEN50-200A	20	15	15.4	27	58.0					58.3	58.0	57.5	57.0	56.4	55.7	55.0	53.2	51.3	49.0	46.3	42.8	38.8
SEN50-250C	20	15	20	32.5	71.5						70.8	70,3	69.7	69.0	68.3	67.6	66.0	64.0	61.5	58.6	55.0	50.5
SEN50-250B	25	18.5	23	41.5	78.0						78.0	77.4	76.8	76.1	75.3	74.5	72.8	70.6	68.2	65.5	62.2	58.3
SEN50-250A	30	22	28.5	51.5	90.0						89.5	88.8	88.3	87.7	86.9	86.1	84.5	82.7	80.5	78	75.2	71.7

Type	P2 nom.		P1 max	I	Q (m³/h - l/min)																		
					0	30	33	36	39	42	48	54	60	66	72	78	84	96	108	120	132	144	156
					0	500	550	600	650	700	800	900	1000	1100	1200	1300	1400	1600	1800	2000	2200	2400	2600
	HP	KW	KW	3x400V 50 HZ	H (m)																		
SEN65-125B1	7.5	5.5	6.4	11	19.4	20.4	20.4	20.3	20.2	20.1	19.8	19.4	19.0	18.5	17.9	17.2	16.5	15.0	13.3	11.1			
SEN65-125B	7.5	5.5	7.2	12.6	20.9	22.0	22.0	21.9	21.8	21.7	21.4	21.0	20.6	20.1	19.6	19.0	18.3	16.6	14.7	12.6			
SEN65-125A1	10	7.5	8.1	14	23	24.1	24.1	24.0	23.9	23.8	23.6	23.3	23.0	22.7	22.3	21.8	21.2	19.7	17.8	15.7			
SEN65-125A	10	7.5	9.5	16.3	25.4	26.4	26.4	26.4	26.3	26.3	26.1	25.9	25.6	25.3	24.9	24.5	24.0	22.7	21.0	18.9	16.5		
SEN65-160C	12.5	9.2	11.7	19.5	29.8					31.2	31.1	30.8	30.5	30.1	29.6	29.0	28.3	26.6	24.6	22.1	19.3	16.0	
SEN65-160B	15	11.0	13.0	22.5	33.0					34.6	34.4	34.2	34.0	33.7	33.3	32.8	32.1	30.6	28.8	26.7	24.1	21.1	
SEN65-160A1	20	15	15.8	27.6	37.1					38.5	38.3	38.1	37.8	37.5	37.1	36.7	36.1	34.6	32.8	30.7	28.4	25.7	
SEN65-160A	20	15.0	18.0	30.0	39.2					40.6	40.6	40.4	40.2	40.0	39.7	39.4	38.9	37.7	36,2	34.3	32.2	29.8	
SEN65-200C1	20	15	17.1	28.8	43.1							43.8	43.2	42.5	41.7	40.6	39.5	36.8	33.4	29.3	24.5		
SEN65-200C	20	15	18.6	31.4	45.3							46.3	45.7	45.1	44.3	43.4	42.3	39.8	36.7	32.7	28.0		
SEN65-200B	25	18.5	22.6	38.2	51.6							52.6	52.2	51.8	51.0	50.2	49.3	47.1	44.1	40.9	36.6	31.3	
SEN65-200A	30	22.5	26.6	43.8	60.2							61.0	60.6	60.1	59.5	58.7	57.8	55.8	53.1	49.8	46.1	41.7	
SEN65-250B	40	30	37.8	63.5	81.0							79.5	78.5	77.3	76.0	74.5	73.0	69.3	65.0	60.0	54.5	48.5	
SEN65-250A	50	37	45	74.5	90.0							89.5	88.5	87.5	86.5	85.5	84.0	80.5	76.5	72.0	66.5	60.5	54.0

Type	P2 nom.		P1 max	I	Q (m³/h - l/min)																
					0	66	72	78	84	96	108	120	132	144	156	168	180	195	210	225	240
					0	1100	1200	1300	1400	1600	1800	2000	2200	2400	2600	2800	3000	3250	3500	3750	4000
	HP	KW	KW	3x400V 50 HZ	H (m)																
SEN80-160E	12.5	9.2	9.9	17.2	21.4	22.4	22.1	21.6	21.2	20.2	19.2	18.0	16.8	15.4	13.7	12.0					
SEN80-160D	15	11	12.7	22.1	25.4	26.4	26.1	25.7	25.3	24.4	23.6	22.5	21.3	20.0	18.5	16.9	15.1				
SEN80-160C1	20	15	14.8	25.5	28.5	29.5	29.3	29.0	28.6	27.8	26.9	25.7	24.6	23.3	21.7	19.9	17.9	15.2			
SEN80-160C	20	15	15.9	27.4	29.7	30.7	30.5	30.3	29.9	29.2	28.1	27.1	26.0	24.7	23.1	21.5	19.7	17.2			
SEN80-160B	25	18.5	20.1	34.8	34	35.0	35.0	34.8	34.6	34.0	33.3	32.5	31.6	30.5	29.2	27.8	26.0	23.6	21.0		
SEN80-160A	30	22.5	23.7	39.8	38.8	39.8	39.7	39.6	39.4	38.9	38.2	37.5	36.7	35.7	34.5	33.2	31.6	29.4	26.8	23.5	
SEN80-200B	40	30	37.8	63.5	49.0				50.8	50.6	50.3	49.8	49.3	48.6	47.7	46.7	45.5	43.8	41.5	38.6	
SEN80-200A	50	37	45	74.5	58.0					59.6	59.2	58.6	58.0	57.3	56.4	55.5	54.3	52.7	50.8	48.5	46.1

Data Curve

SEN50-125

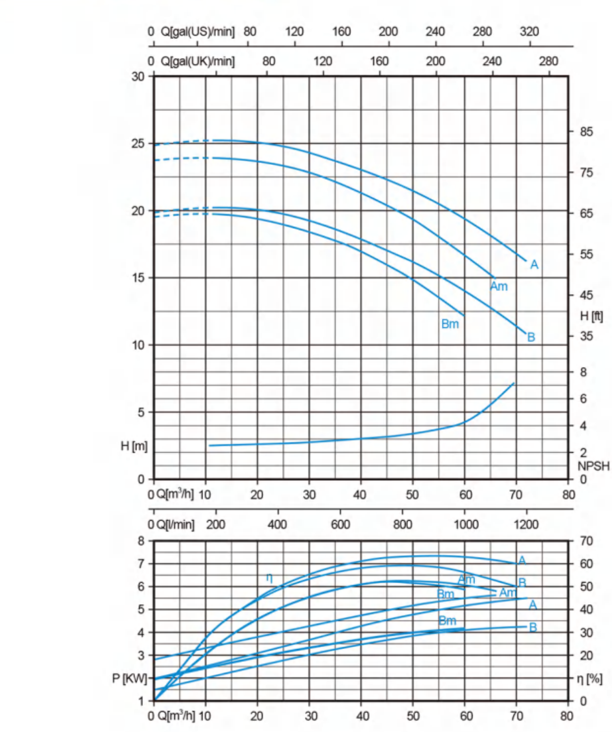

SEN50-160

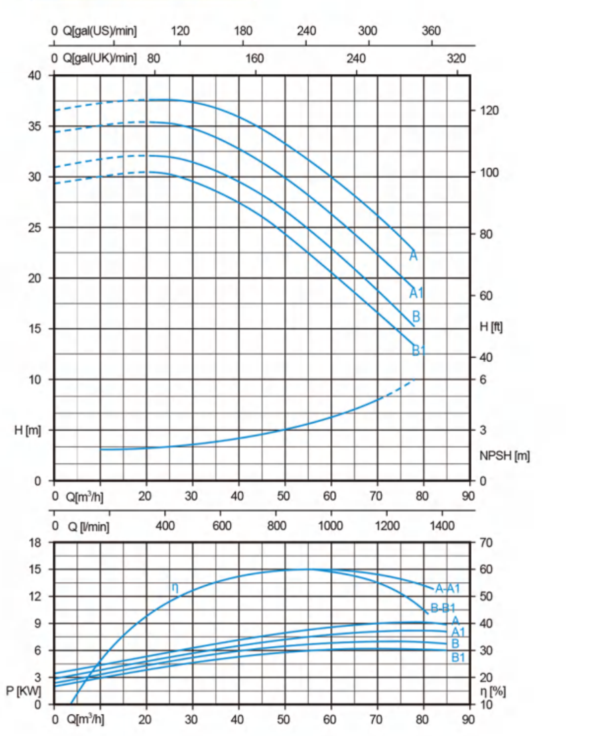

SEN50-200

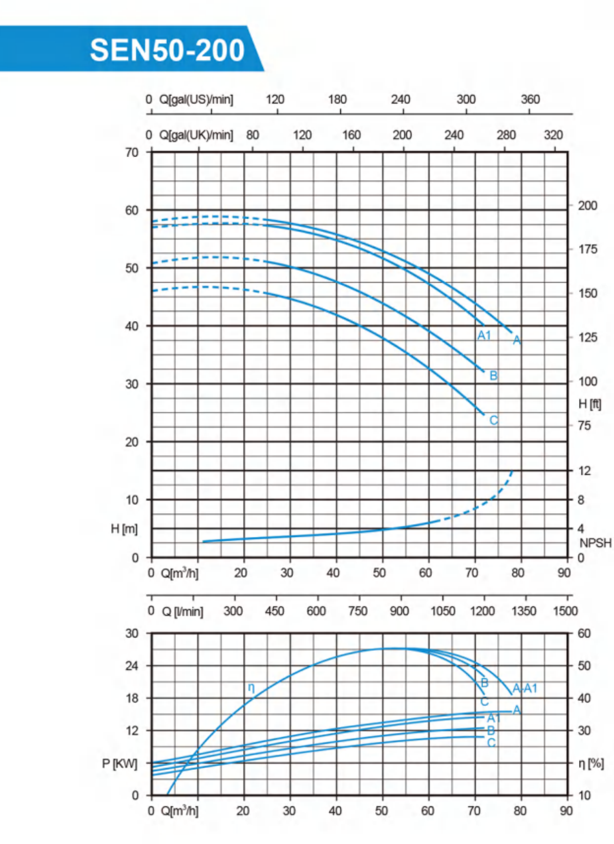

SEN50-250

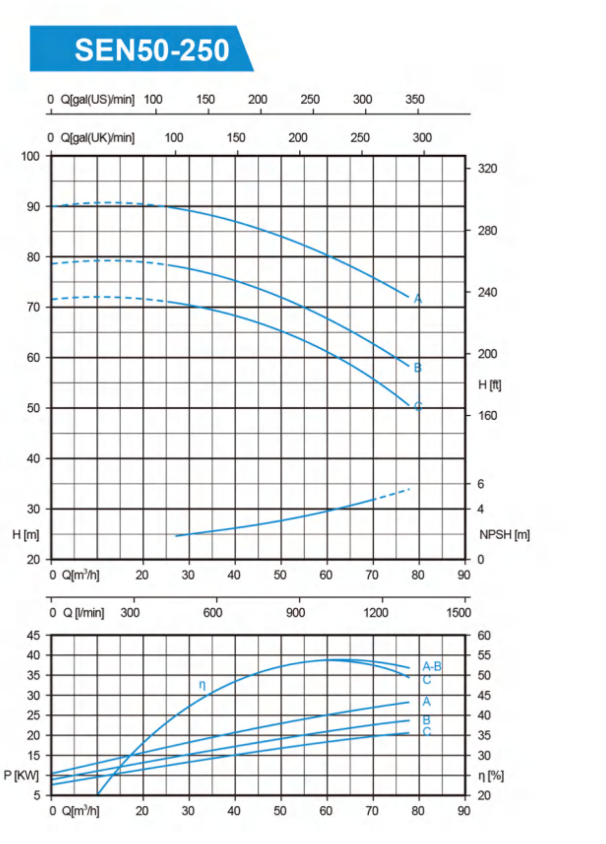

Installation Dimension

Type	Dimensions (mm)																		
	DNM	DNA	a	h1	h2	m1	m2	n1	n2	b	x	s	C	B	H	I	L	M	Kg
SEN32-160C	32	50	80	132	160	100	70	240	190	50	12	14	490	240	292	520	260	355	38
SEN32-160B	32	50	80	132	160	100	70	240	190	50	12	14	490	240	292	520	260	355	39
SEN32-160A	32	50	80	132	160	100	70	240	190	50	12	14	490	240	292	520	260	355	42
SEN32-200C	32	50	80	160	180	100	70	240	190	50	12	14	505	268	340	530	305	400	51.5
SEN32-200B1	32	50	80	160	180	100	70	240	190	50	12	14	520	268	340	615	310	460	61
SEN32-200B	32	50	80	160	180	100	70	240	190	50	12	14	565	268	340	615	310	460	63
SEN32-200A1	32	50	80	160	180	100	70	240	190	50	12	14	520	268	340	615	310	460	67
SEN32-200A	32	50	80	160	180	100	70	240	190	50	12	14	565	268	340	615	310	460	69
SEN32-250C	32	50	100	180	225	125	95	320	250	65	12	14	625	305	405	665	335	535	83
SEN32-250B	32	50	100	180	225	125	95	320	250	65	14	14	625	305	405	665	335	535	90
SEN32-250A1	32	50	100	180	225	125	95	320	250	65	14	14	625	305	405	665	335	535	95
SEN32-250A	32	50	100	180	225	125	95	320	250	65	14	14	695	305	405	735	335	535	120
SEN40-125C	40	65	80	112	140	100	70	210	160	50	12	14	495	220	252	520	260	355	36
SEN40-125B	40	65	80	112	140	100	70	210	160	50	12	14	495	220	252	520	260	355	37
SEN40-125A	40	65	80	112	140	100	70	210	160	50	12	14	495	220	252	520	260	355	40
SEN40-160B	40	65	80	132	160	100	70	240	190	50	12	14	500	245	292	520	260	355	47
SEN40-160A	40	65	80	132	160	100	70	240	190	50	15	14	500	245	292	520	260	355	50
SEN40-200B1	40	65	80	132	160	100	70	240	190	50	15	14	545	273	340	615	310	460	63
SEN40-200B	40	65	100	160	180	100	70	265	212	50	15	14	590	273	340	615	310	460	65
SEN40-200A1	40	65	80	132	160	100	70	240	190	50	15	14	545	273	340	615	310	460	69
SEN40-200A	40	65	100	160	180	100	70	265	212	50	15	14	590	273	340	615	310	460	71
SEN40-250C	40	65	100	180	225	125	95	320	250	65	15	14	630	322	405	665	335	535	84
SEN40-250B	40	65	100	180	225	125	95	320	250	65	15	14	630	322	405	665	335	535	91
SEN40-250A1	40	65	100	180	225	125	95	320	250	65	15	14	630	322	405	665	335	535	96
SEN40-250A	40	65	100	180	225	125	95	320	250	65	15	14	700	322	405	735	335	535	121
SEN50-125B	50	65	100	132	160	100	70	240	190	50	12	14	525	250	292	520	260	355	47
SEN50-125A	50	65	100	132	160	100	70	240	190	50	12	14	525	250	292	520	260	355	50
SEN50-160B1	50	65	100	160	180	100	70	265	212	50	12	14	545	270	340	615	310	460	63
SEN50-160B	50	65	100	160	180	100	70	265	212	50	12	14	590	270	340	615	310	460	65
SEN50-160A1	50	65	100	160	180	100	70	265	212	50	12	14	545	270	340	615	310	460	69
SEN50-160A	50	65	100	160	180	100	70	265	212	50	12	14	590	270	340	615	310	460	71
SEN50-200C	50	65	100	160	200	100	70	265	212	50	12	14	635	290	360	665	335	535	82
SEN50-200B	50	65	100	160	200	100	70	265	212	50	12	14	635	290	360	665	335	535	89
SEN50-200A1	50	65	100	160	200	100	70	265	212	50	12	14	635	290	360	665	335	535	94
SEN50-200A	50	65	100	160	200	100	70	265	212	50	12	14	705	290	360	735	355	535	122
SEN50-250C	50	65	100	180	225	125	95	320	250	65	14	14	705	332	405	735	355	535	125
SEN50-250B	50	65	100	180	225	125	95	320	250	65	14	14	750	332	405	815	355	535	140
SEN50-250A	50	65	100	180	225	125	95	320	250	65	14	14	750	332	405	815	355	535	149
SEN65-125B1	65	80	100	160	180	125	95	280	212	65	14	14	560	280	340	615	310	460	62
SEN65-125B	65	80	100	160	180	125	95	280	212	65	14	14	605	280	340	615	310	460	64
SEN65-125A1	65	80	100	160	180	125	95	280	212	65	14	14	560	280	340	615	310	460	68
SEN65-125A	65	80	100	160	180	125	95	280	212	65	14	14	605	280	340	615	310	460	70
SEN65-160C	65	80	100	160	200	125	95	280	212	65	14	14	635	290	360	665	335	535	84
SEN65-160B	65	80	100	160	200	125	95	280	212	65	14	14	635	290	360	665	335	535	90
SEN65-160A1	65	80	100	160	200	125	95	280	212	65	14	14	635	290	360	665	355	535	95
SEN65-160A	65	80	100	160	200	125	95	280	212	65	14	14	705	290	360	735	355	535	120
SEN65-200C1	65	80	100	180	225	125	95	320	250	65	14	14	675	330	405	735	355	535	92
SEN65-200C	65	80	100	180	225	125	95	320	250	65	14	14	705	330	405	735	355	535	122
SEN65-200B	65	80	100	180	225	125	95	320	250	65	14	14	750	330	405	815	355	535	138
SEN65-200A	65	80	100	180	225	125	95	320	250	65	14	14	750	330	405	815	355	535	148
SEN65-250B	65	80	100	200	250	160	120	320	280	80	16	19	850	370	450	850	380	490	239
SEN65-250A	65	80	100	200	250	160	120	320	280	80	16	19	850	370	450	850	380	490	253
SEN80-160E	80	100	125	180	225	125	95	320	250	65	14	14	665	330	405	665	335	535	92
SEN80-160D	80	100	125	180	225	125	95	320	250	65	14	14	665	330	405	665	335	535	98.5
SEN80-160C1	80	100	125	180	225	125	95	320	250	65	14	14	665	330	405	665	335	535	104
SEN80-160C	80	100	125	180	225	125	95	320	250	65	14	14	735	330	405	735	355	535	129
SEN80-160B	80	100	125	180	225	125	95	320	250	65	14	14	780	330	405	815	355	535	143
SEN80-160A	80	100	125	180	225	125	95	320	250	65	14	14	780	330	405	815	355	535	152
SEN80-200B	80	100	125	180	250	125	95	345	280	65	16	14	840	355	405	850	380	490	233
SEN80-200A	80	100	125	180	250	125	95	345	280	65	16	14	840	355	405	850	380	490	247